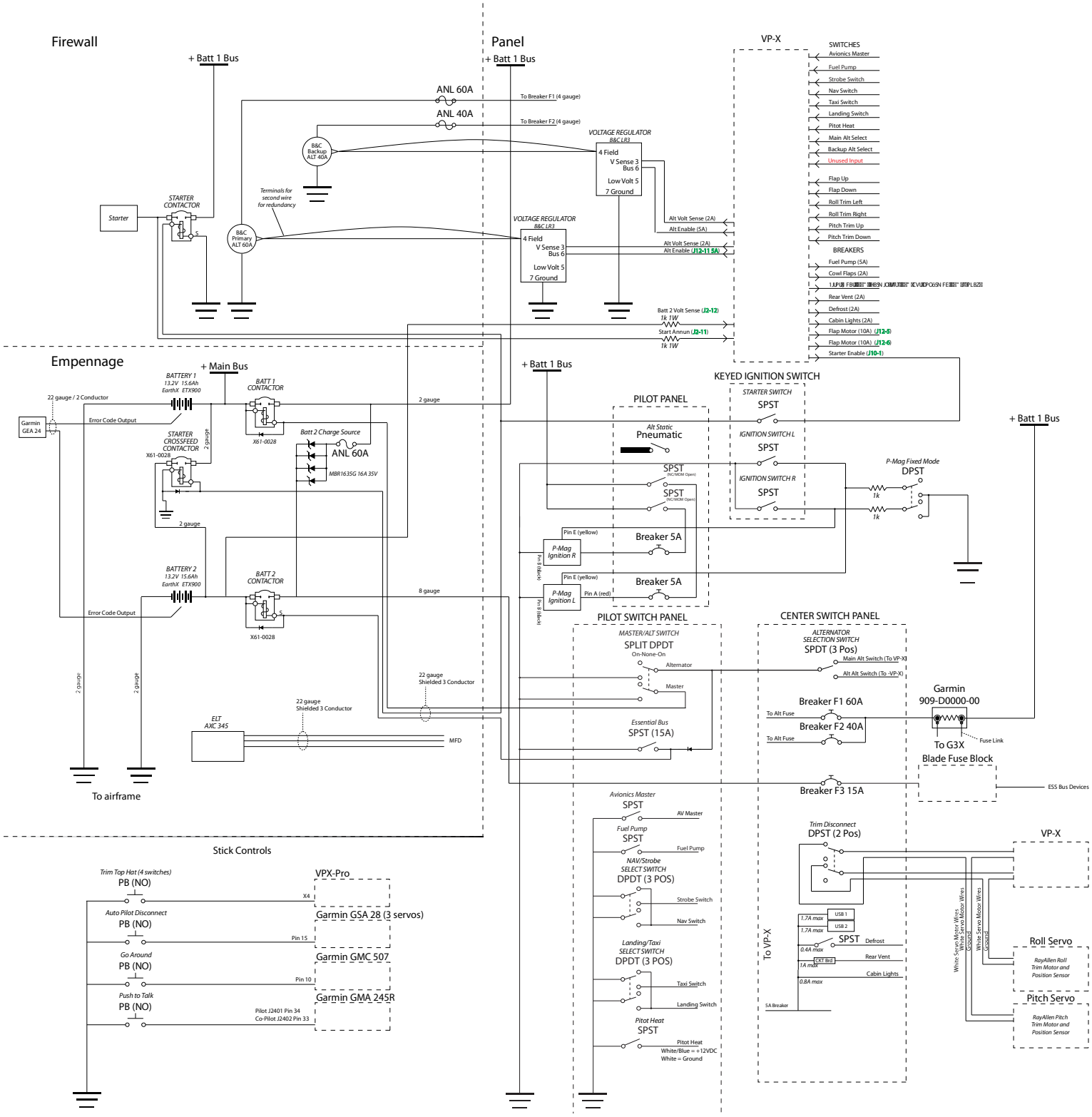
Firewall
+ Batt 1 Bus
ANL 60A
To Breaker F1 (4 gauge)
ANL 40A
To Breaker F2 (4 gauge)
B&C Backup ALT 40A
VOLTAGE REGULATOR B&C LR3
4 Field
V Sense 3
Bus 6
Low Volt 5
7 Ground
Terminals for second wire for redundancy
STARTER CONTACTOR
Starter
B&C Primary ALT 60A
VOLTAGE REGULATOR B&C LR3
4 Field
V Sense 3
Bus 6
Low Volt 5
7 Ground
Alt Volt Sense (2A)
Alt Enable (5A)
Alt Volt Sense (2A)
Alt Enable (J12-11 5A)
Batt 2 Volt Sense (J2-12)
1k 1W
Start Annun (J2-11)
1k 1W
Panel
+ Batt 1 Bus
VP-X
SWITCHES
Avionics Master
Fuel Pump
Strobe Switch
Nav Switch
Taxi Switch
Landing Switch
Pitot Heat
Main Alt Select
Backup Alt Select
Unused Input
Flap Up
Flap Down
Roll Trim Left
Roll Trim Right
Pitch Trim Up
Pitch Trim Down
BREAKERS
Fuel Pump (5A)
Cowl Flaps (2A)
Rear Vent (2A)
Defrost (2A)
Cabin Lights (2A)
Flap Motor (10A) (J12-5)
Flap Motor (10A) (J12-6)
Starter Enable (J10-1)
Empennage
+ Main Bus
BATTERY 1
13.2V 15.6Ah
EarthX ETX900
22 gauge / 2 Conductor
Garmin GEA 24
Error Code Output
BATT 1 CONTACTOR
X61-0028
2 gauge
STARTER CROSSFEED CONTACTOR
X61-0028
Batt 2 Charge Source
ANL 60A
MBR1635G 16A 35V
2 gauge
BATTERY 2
13.2V 15.6Ah
EarthX ETX900
BATT 2 CONTACTOR
X61-0028
8 gauge
Error Code Output
2 gauge
2 gauge
22 gauge Shielded 3 Conductor
22 gauge Shielded 3 Conductor
ELT AXC 345
MFD
To airframe
+ Batt 1 Bus
KEYED IGNITION SWITCH
STARTER SWITCH
SPST
PILOT PANEL
Alt Static
Pneumatic
IGNITION SWITCH L
SPST
SPST (NC/MOM Open)
SPST (NC/MOM Open)
IGNITION SWITCH R
SPST
P-Mag Fixed Mode
DPST
1k
1k
+ Batt 1 Bus
Pin E (yellow)
P-Mag Ignition R
Breaker 5A
Pin 8 (black)
Pin E (yellow)
P-Mag Ignition L
Pin A (red)
Breaker 5A
Pin 8 (black)
PILOT SWITCH PANEL
MASTER/ALT SWITCH
SPLIT DPDT
On-None-On
Alternator
Master
Essential Bus
SPST (15A)
CENTER SWITCH PANEL
ALTERNATOR SELECTION SWITCH
SPDT (3 Pos)
Main Alt Switch (To VP-X)
Alt Alt Switch (To -VP-X)
Breaker F1 60A
To Alt Fuse
Breaker F2 40A
To Alt Fuse
Garmin 909-D0000-00
Fuse Link
To G3X
Blade Fuse Block
ESS Bus Devices
Breaker F3 15A
Avionics Master
SPST
AV Master
Fuel Pump
SPST
Fuel Pump
NAV/Strobe SELECT SWITCH
DPDT (3 POS)
Strobe Switch
Nav Switch
Landing/Taxi SELECT SWITCH
DPDT (3 POS)
Taxi Switch
Landing Switch
Pitot Heat
SPST
Pitot Heat
White/Blue = +12VDC
White = Ground
Trim Disconnect
DPST (2 Pos)
VP-X
To VP-X
1.7A max
USB 1
USB 2
1.7A max
SPST
Defrost
0.4A max
CKT Brd
Rear Vent
1A max
Cabin Lights
0.8A max
5A Breaker
White Servo Motor Wires
Ground
White Servo Motor Wires
Ground
Roll Servo
RayAllen Roll Trim Motor and Position Sensor
Pitch Servo
RayAllen Pitch Trim Motor and Position Sensor
Stick Controls
Trim Top Hat (4 switches)
PB (NO)
VPX-Pro
X4
Auto Pilot Disconnect
PB (NO)
Garmin GSA 28 (3 servos)
Pin 15
Go Around
PB (NO)
Garmin GMC 507
Pin 10
Push to Talk
PB (NO)
Garmin GMA 245R
Pilot J2401 Pin 34
Co-Pilot J2402 Pin 33